NUMERICAL SOLUTION OF LINEAR DIFFERENTIAL GAMES

N.D.Botkin, M.A.Zarkh, V.S.Patsko
Institute of Mathematics and Mechanics
Ural Branch of the Academy of Sciences
Sverdlovsk, USSR

1. Introduction

Speaking about differential games (DGs) we shall bear in mind the aircraft landing problem in the presence of wind disturbance as an example. The landing begins from the hight of 400 m and continues 120 sec approximately.

It is necessary to control aircraft so that its deviation from the nominal trajectory would not be too much and in the moment of crossing the runway (RW) threshold parameters of motion would be permissible. We consider that wind disturbance, which interferes control process, rises from wind microburst. The microburst is caused by falling mass of air, which hits the ground surface and gives vortex. When aircraft crosses the microburst zone the value and direction of the wind change sharply along the aircraft motion.

Extension and configuration of the microburst and distribution of wind field inside could be regarded as known under too idealistic consideration only. More realistic we can hope to have information only about deviations of the wind value and its direction from some middle values.

So we meet some mathematical task, formulated as a differetial game (DG): equations of aircraft dynamics and restrictions of its control parameters are given, restrictions upon the disturbance parameters are known also. The question arises about an optimization of guaranteed result.

Nowadays the DGs theory is the developed mathematical discipline [1-8].

Essential results have been achieved, particularly, by mathematicians in Sverdlovsk: conception of positional DGs was developed, universal ways for construction of optimal strategies were suggested, and now numerical methods and algorithms are devising. These are some key-words, typical for Sverdlovsk mathematical school on DG: discrete scheme of control, maximal stable bridge, extremal strategy. Main results are stated in monographs [4,7,8,9].

Devised in Sverdlovsk numerical methods concern both linear and nonlinear problems. In this paper we are dealing with some methods, namely those, which can be applied for solving the aircraft landing problem. We shall suppose that aircraft dynamics equations are linearized respectively the nominal motion and so DG is linear. This linear DG can be considered as an auxiliary game for the original nonlinear system. Closed-loop control methods (strategies) found from solving linear DG are applied then to the original system.

2. Linear DG with fixed terminal time

The standard form of linear DG is following

$$\begin{aligned} &\dot{x} = A(t)x + B(t)u + C(t)v \\ &x \in R^n, \quad u \in P, \quad v \in Q, \quad T, \quad \varphi(x(T)) \ . \end{aligned} \tag{2.1}$$

Here x is the state vector, u is the control parameter of the first player, v is one of the second player. Compact sets P , Q restrict controls of players.

The terminal time T of DG is considered to be fixed. The quality of process is evaluated by the convex payoff function φ , which calculated at the terminal moment.

Very often one passes [7,9] from the game (2.1) to the equivalent DG of the form

$$\begin{aligned} &\dot{y} = D(t)u + E(t)v \\ &D(t) = X(T,t)B(t) \ , \quad E(t) = X(T,t)C(t) \\ &u \in P, \quad v \in Q, \quad T, \quad \varphi(y(T)) \ . \end{aligned} \tag{2.2}$$

The pass is realised by transformation $y(t) = X(T,t)x(t)$, where $X(T,t)$ is the Cauchy matrix, corresponding to the matrix A of system (2.1). The advantage of DG (2.2) over DG (2.1) is that the state variable is absent in the right side, simplifying writing. More than that, in the case, when payoff function φ depends upon some m coordinates of the state vektor only, we can reduce dimension of the equivalent DG and make it equal m . For this it is necessary to use m corresponding rows of Cauchy matrix in performing pass from variable x to variable y .

3. Switch surfaces

In the Institute of Mathematics and Mechanics of the Ural Branch of the USSR Academy of Sciences effective methods and algorithms

have been devised for solving linear DGs with fixed terminal moment and convex payoff function, which depends upon two, three and more coordinates of the state vector.

The numerical procedures are founded on construction in coordinates of the equivalent DG (2.2) of sections of level sets for DG value function Γ. Every section corresponds to some definite moment on the time axis. Giving number c, we find corresponding level set

$$W_c(T) = \{ y \in R^m : \varphi(y) \le c \}$$

of payoff function φ, and moving contraward in time from terminal moment T, we construct sections $W_c(t_i)$ (Fig.1) of level set of value function Γ, using chosen net for calculation.

Contraward constructions in DG theory ascend to works of R.Bellman, R.Isaacs, W.Fleming, L.S.Pontryagin, B.N.Pshenichnii. In the case of linear DGs with fixed terminal time and convex payoff function, the main difficulty to perform pass from the current section $W_c(t_i)$ (constructed for moment t_i) to the next section $W_c(t_{i+1})$ is connected with the procedure of convexing for positively-homogeneous function. Complexity of this procedure grows essentially with increasing of dimension m. There is specifical facilitation, so as before beginning the convexity procedure we have information about place of violation of local convexity. Such specifics allowes to create very fast algorithms for contraward constructions.

Dealing with level sets of value function, we can construct optimal strategies both for the first and the second players. Most clearly it appears in the case when control parameter of the first player or the second player is scalar.

Suppose, that control parameter of the first player is scalar, namely $|u(t)| \le \mu$. Then $D(t)$ is a vector with dimension m. For every t we find in space R^m the set of all points so that for every point there is a vector from vectors of the subdifferential of the value function $y \to \Gamma(t,y)$, which gives zero scalar product with vector $D(t)$. This set generates "the surface", which divides the space R^m into two parts. In the part, where the vector $D(t)$ is directed, the optimal control parameter of the first player has the value $-\mu$ in the moment t, on the other side from the surface the optimal value is $+\mu$. Just upon the switch surface one can take arbitrary values from the segment $[-\mu, \mu]$. This way of the first player control was grounded in [10,11]. It is stable in respect to errors of numerical construc-

tion of the switch surfaces. When we use the discrete scheme of control, the switch surfaces are to be constructed before upon the given net of the time moments.

The most simple constructions are carried out in the case $m = 2$. Here we have switch lines. During calculation these lines are maintained from segments (Fig.2). Numerical constructed switch lines for control law aircraft landing problem are shown in Fig.3, where $\tau=T-t$.

Analogically the optimal strategy of the second player is constructed by means of the switch surfaces in the scalar case $|v(t)| \le \nu$. Here the vector $E(t)$ is using. But in contrast to the first player, the optimal strategy of the second player is not stable [12].

Let now the control of the first player (or the secont player) is a vector u (v) , which components u_j (v_k) are restricted by independent conditions $|u_j| \le \mu_j$ ($|v_k| \le \nu_k$). In this case it is possible to construct own switch surface for every component u_j (v_k) , using j (k) column of matrix $D(t)$ ($E(t)$) . So we shall have the set of switch surfaces for every time moment t . Method of closed-loop control, which uses such sets, gives an optimal result under special suggestions.

In conclusion of this section, note we can use contraward procedures for immediate constructing of value function epigraph. For this we use contraward method for definite corresponding DG in space with dimension increased by 1. In Fig.4 we show graph of value function $y \to \Gamma(t,y)$ in the model DG

$$\dot{x}_1 = x_2 + v$$
$$\dot{x}_2 = u , \qquad |u| \leqslant 1 , \quad |v| \leqslant 1$$

with terminal moment T and payoff function $\varphi(x) = \max\{|x_1|, |x_2|\}$ for the moment $t=T-2$ in equivalent coordinates $y(t) = X(T,t)x(t)$.

4. Aircraft landing problem

The aircraft motion during landing is described by a differential equations system of 22-th order. The first 12 equations are correspond to trajectory and angle motion. The last 10 ones imitate the inertionality of control devices and inertial character of wind velocity along the motion. The control factors are: deviations of the elevator,the rudder,the ailerones and change of thrust force. The disturbance vector consist of three wind components. The linearization of the system with respect to the nominal motion gives linear controllable system, which desintegrates into two subsystems of vertical (longitudinal) and lateral motions.

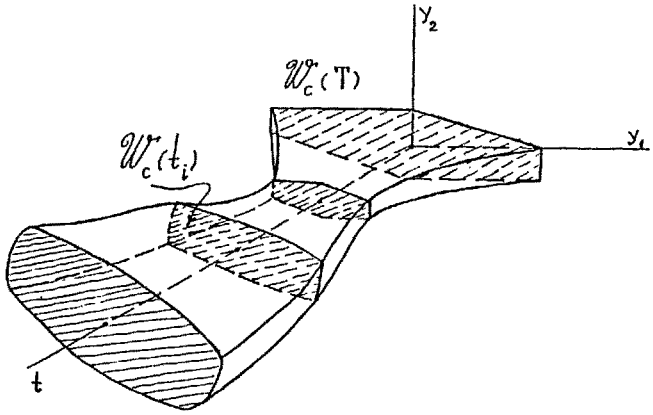

Fig.1.Maximal stable bridge

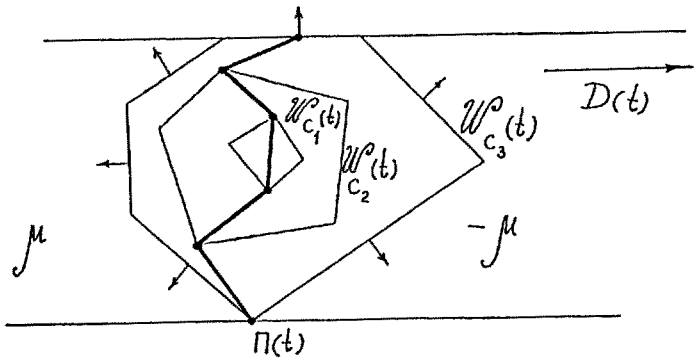

Fig.2.Switch line construction

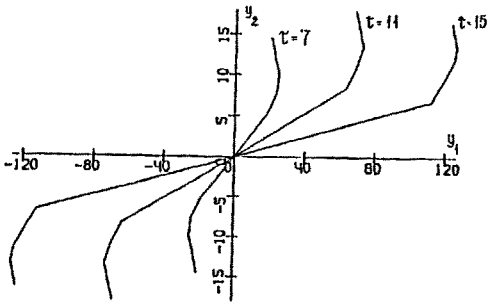

Fig.3.Switch lines

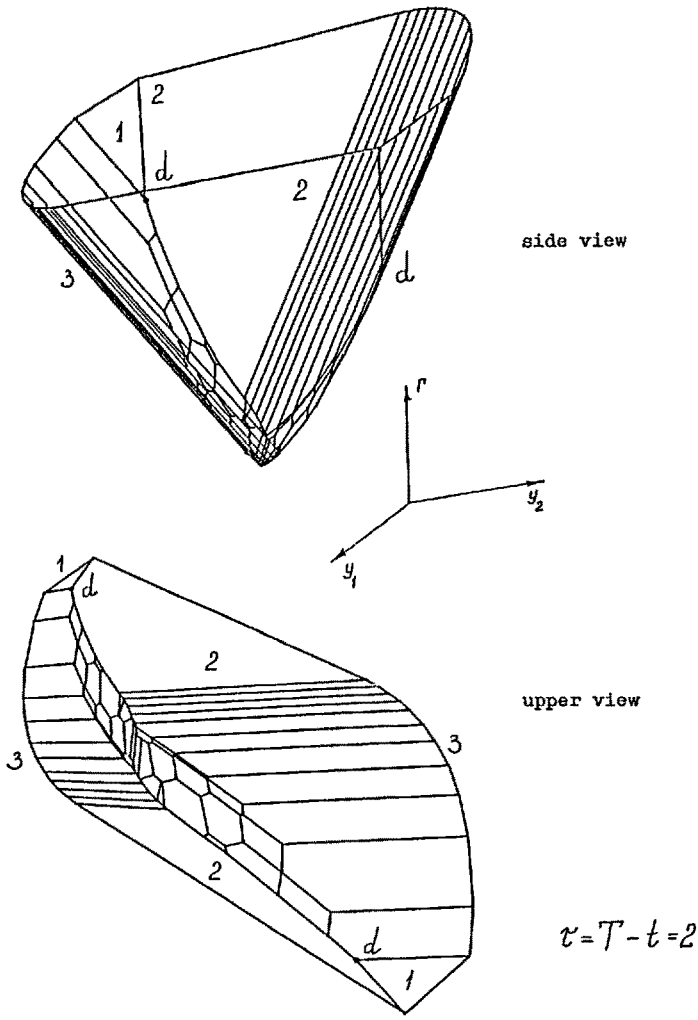

Fig. 4 .Value function

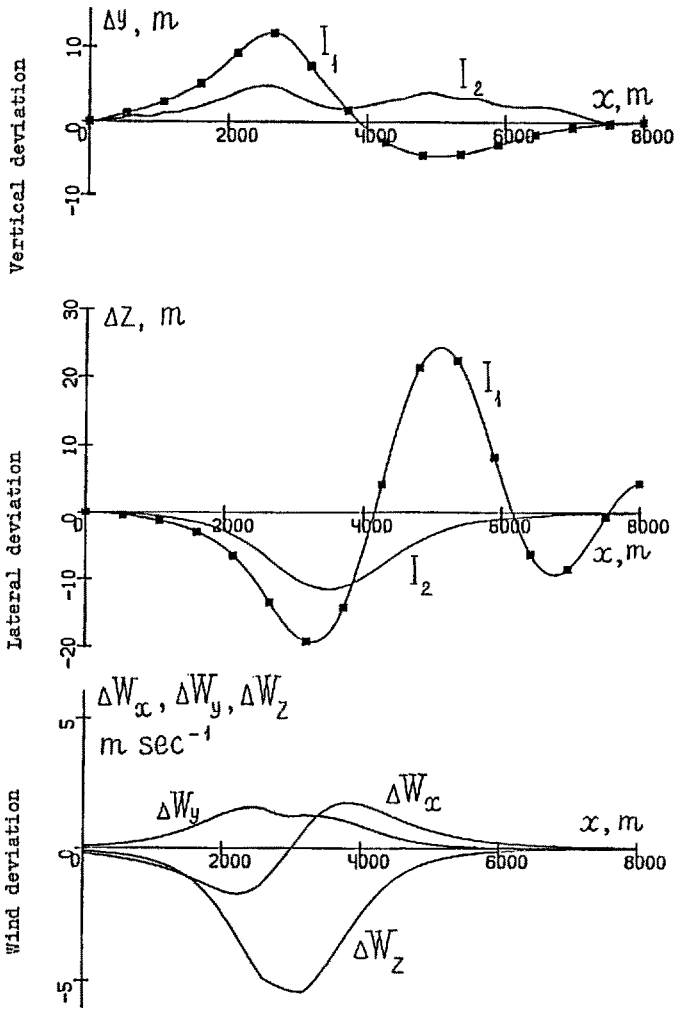

Fig.5. Landing simulation result. Microburst centre coordinates: DX=3000 m, DZ=1500 m.

For each of the subsystems we consider an auxiliary differential game with fixed terminal time T and convex payoff function depending on two state vector coordinates at the moment T . Solving the auxiliary problems on computer, we find optimal strategies for control parameters which are realized by means of switch lines.

Simulating original nonlinear system motions,we suppose that the wind disturbance is coused by the aircraft flight through the microburst zone. The microburst model we used has been taken from the paper [13].

Consider two methods of control. The method I_1 uses accepted nowadays autopilot algorithms. These algoritms are founded on the linear theory of automatic control. In the method I_2 control factors are constructed by means of switch lines obtained from the auxiliary differential games.

Simulation results for the control methods I_1, I_2 are shown in Fig 5. We give graphs of vertical Δy and lateral Δz deviations from the nominal motion and also realizations of wind velocity deviations ΔW_x , ΔW_y , ΔW_z. It can be seen that the results for the minimax method I_2 are better than for the traditional method I_1.

In conclusion we emphasize that computation of minimax control method demands neither accurate information about the disposition of external wind disturbance zone nor any information about the wind velocity field in that zone. It is enough to describe amplitude of wind velocity variation approximately . This is the principle difference of the approach, based on the DG theory, from the methods, given in [14,15], where such information is essential.

Applications of DG theory to the landing problem have been considered in [12,16-20].

References

1. Isaaks, R.(1965).Differential Games, John Wiley, New York.
2. Pontryagin, L.S. (1967). Linear differential games. 2, Soviet Math. Dokl. 8, 910-912.
3. Blaquiere, A., Gerard, F., Leitman, G. (1969). Quantitative and Qualitative Games, Academic Press, New York.
4. Krasovskii, N.N. (1970). Games Problems about Contact of Motions. Nauka, Moskow, 1970 (in Russian).
5. Pshenichnii, B.N. and Sagaidak, M.I. (1970). Differlntial games of prescribed duration, Cybernetics, 6(2), No.2, 72-83.
6. Friedman, A. (1971). Differential Games. Interscience, New York.
7. Krasovskii, N.N. (1985). Dinamic System Control, Nauka, Moskow (in Russian).
8. Krasovskii, N.N. and Subbotin, A.I. (1988). Game-Theoretical Control Problems, Springer-Verlag, New York.
9. Subbotin, A.I. and Chentsov, A.G. (1981). Optimization of Guaranteed Result in Control Problems. Nauka, Moskow (in Russian).

10. Botkin, N.D. and Patsko, V.S. (1982). Universal strategy in a differential game with fixed terminal time, Problems of Control and Information Theory, 11, No.6, 419-432.
11. Botkin,N.D. and Patsko, V.S. (1983). Positional control in a linear differential game, Engineering Cybernetics, 21, No.4, 69-75.
12. Zarkh, M.A. and Patsko, V.S. (1987). The construction of the second player control in a linear differential game on the basis of the repulsion property, The Control with the Guaranteed Result. Ural Sci. Centr. Akad. Nauk SSSR, Sverdlovsk, 37-70 (in Russian).
13. Ivan, M. (1985). A ring-vortext downburst model for real time flight simulation of severe wind shears. AIAA Flight Simulation Technologies Conf., St.Louis, Miss, 57-61.
14. Miele, A., Wang, T. and Melvin, W.W. (1986). Optimal take-off trajectories in the presence of windshear. J. Opt. Theory and Appl., 49, No.1, 1-45.
15. Miele, A., Wang, T., Wang, H. and Melvin, W.W. (1988). Optimal penetration landing trajectories in the presence of windshear, J. Opt. Theory and Appl., 57, No.1, 1-40.
16. Kein, V.M.,Parikov, A.N. and Smurov, M.Yu. (1980). On means of optimal control by the extremal aiming method. Prikl. Matem. Mekhan., 44, No.3, 434-440 (in Russian).
17. Titovskii, I.N. (1981). Game theoretical approach to the synthesis problem of aircraft control in the landing. Uchenye zapiski centr. Aerohidrodinam. Inst., XII , No.1, 85-92 (in Russian).
18. Botkin, N.D.,Kein, V.M. and Patsko, V.S. (1984). The model problem of controlling the lateral motion of an aircraft in the landing, J. Appl. Math. Mech., 48, No.4, 395-400.
19. Korneev, V.A., Melikyan, A.A. and Titivskii, I.N. (1985). Stabilization of aircraft glide path in wind disturbances in the min-max formulation, Izv. Akad. Nauk SSSR. Tekhn. Kibernet., 1985, No.3,132-139.
20. Botkin, N.D., Kein, V.M., Patsko, V.S. and Turova, V.L. (1989). Aircraft landing control in the presence of windshear, Problems of Control and Information Theory, 18, No.4, 223-235.